Front view and mounting

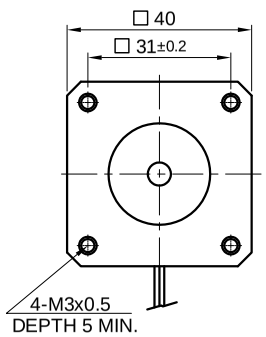

Side view

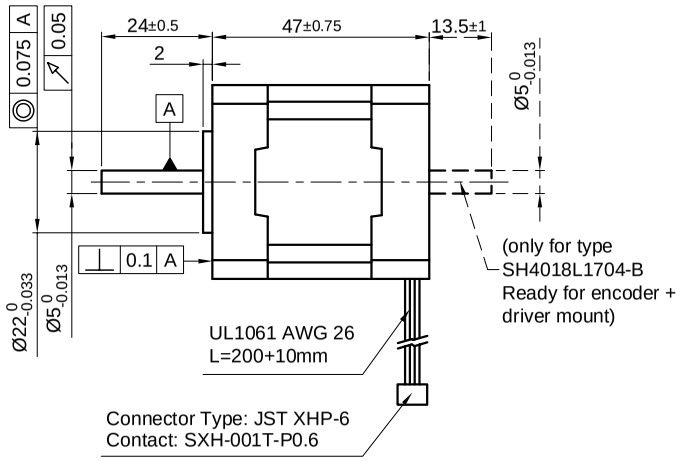

Rear view

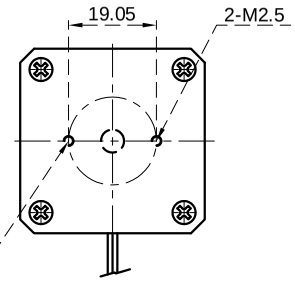

SPECIFICATION \ CONNECTION	BIPOLAR
VOLTAGE (VDC)	2.9
AMPS/PHASE	1.7
RESISTANCE/PHASE (Ohms)@25°C	1.7±15%
INDUCTANCE/PHASE (mH) @1KHz	3.3±20%
HOLDING TORQUE (Nm) [lb-in]	0.26 [2.301]
DETENT TORQUE (Nm) [lb-in]	7.8×10^{-3} [0.069]
STEP ANGLE (°)	1.8
STEP ACCURACY (NON-ACCUM)	±5%
ROTOR INERTIA (Kg-m²) [lb-in²]	3.5×10^{-6} [0.012]
WEIGHT (Kg) [lb]	0.30 [0.662]

TEMPERATURE RISE: MAX.80°C (MOTOR STANDSTILL; FOR 2 PHASE ENERGIZED)

AMBIENT TEMPERATURE −10°~ 50°C [14°F ~ 122°F]

INSULATION RESISTANCE 100 MOhm (UNDER NORMAL TEMPERATURE AND HUMIDITY)

INSULATION CLASS B 130° [266°F]

DIELECTRIC STRENGTH 500VAC FOR 1 MIN. (BETWEEN THE MOTOR COILS AND THE MOTOR CASE)

AMBIENT HUMIDITY MAX. 85% (NO CONDENSATION)

PERMISSIBLE RADIAL+AXIAL FORCE

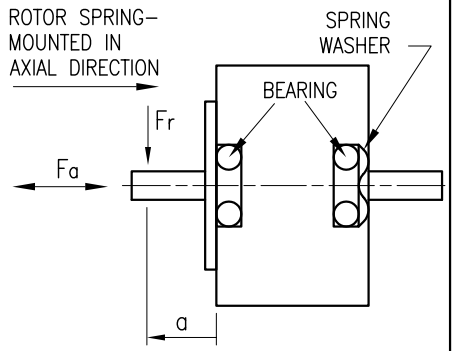

AXIAL-FORCE Fa (N)	Fa=7			
DISTANCE a (mm)	5	10	15	20
RADIAL-FORCE Fr (N)	58	36	26	20

	AXIAL	RADIAL
SHAFT PLAY (mm)	0.075	0.025
AT LOAD MAX: (N)	10	5.0

TYPE OF CONNECTION (EXTERN)	MOTOR		
BIPOLAR	CONNECTOR PIN NO.	LEADS	WINDING
A	1	WHT	A
A\	3	RED	A\
B	2	BLU	B
B\	4	YEL	B\

FULL STEP 2 PHASE-Ex.,
WHEN FACING MOUNTING END (X)

STEP	A	B	A\	B\		CCW
1	+	+	−	−	↓	↑
2	−	+	+	−		
3	−	−	+	+		
4	+	−	−	+	CW	

WIRING DIAGRAM

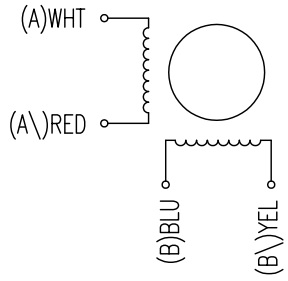

REV	DESCRIPTION	DATE	APVD

NANOTEC:

SH4018L1704

SCALE FREE		APVD	S.K.	04.07.06
X	±0.5	CHKD		
1PL	±0.2	DRN	J.W.	04.07.06
2PL	±0.1	SIGNATURE		DATE
ANGLE	±30'			

STEPPING MOTOR

DWG.NO

SH4018L1704