Front view and mounting

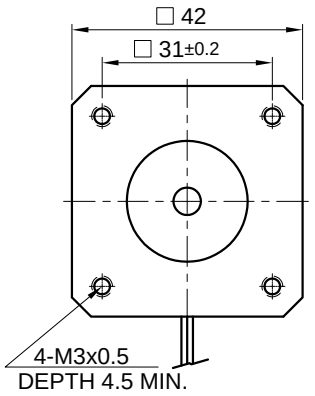

Side view

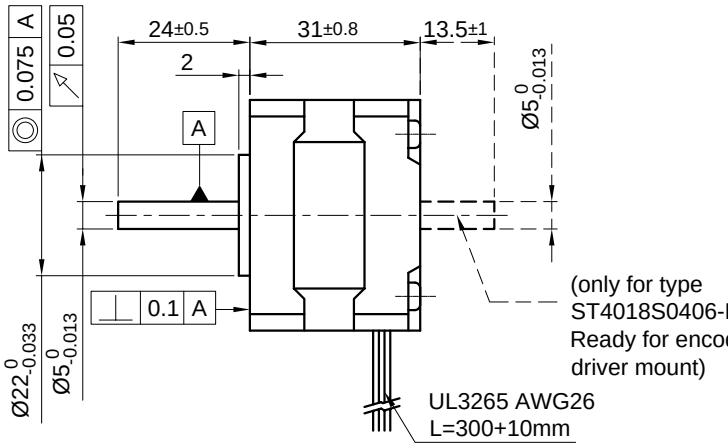

Rear view

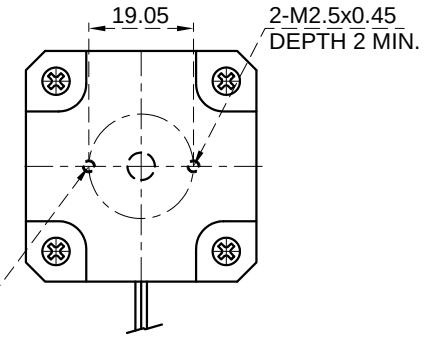

CONNECTION / SPECIFICATION	UNIPOLAR OR BIPOLAR-1 WINDING	BIPOLAR SERIAL
VOLTAGE (VDC)	10.5	14.8
AMPS/PHASE	0.35	0.25
RESISTANCE/PHASE (Ohms)@25°C	30±15%	60±15%
INDUCTANCE/PHASE (mH) @1KHz	21.7±20%	86.8±20%
HOLDING TORQUE (Nm) [lb-in]	0.16 [1.416]	0.226 [2.0]
DETENT TORQUE (Nm) [lb-in]	0.59×10^{-2} [5.222×10^{-2}]	
STEP ANGLE (°)	1.8	
STEP ACCURACY (NON-ACCUM)	±5%	
ROTOR INERTIA (Kg-m²) [lb-in²]	2.7×10^{-6} [0.92×10^{-2}]	
WEIGHT (Kg) [lb]	0.2 [0.44]	

PERMISSIBLE RADIAL+AXIAL FORCE

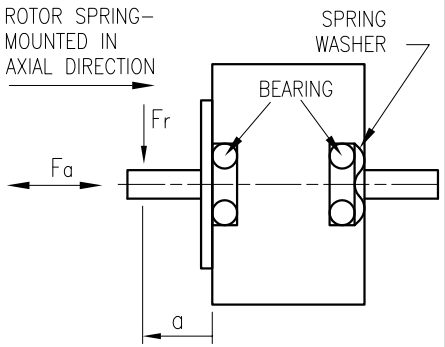

AXIAL-FORCE Fa (N)	Fa=7			
DISTANCE a (mm)	5	10	15	20
RADIAL-FORCE Fr (N)	58	36	26	20

	AXIAL	RADIAL
SHAFT PLAY (mm)	0.075	0.025
AT LOAD MAX: (N)	10	5.0

TEMPERATURE RISE: MAX.80°C (MOTOR STANDSTILL; FOR 2 PHASE ENERGIZED)
AMBIENT TEMPERATURE -10°~ 50°C [14°F ~ 122°F]
INSULATION RESISTANCE 100 MOhm (UNDER NORMAL TEMPERATURE AND HUMIDITY)
INSULATION CLASS B 130° [266°F]
DIELECTRIC STRENGTH 500VAC FOR 1 MIN. (BETWEEN THE MOTOR COILS AND THE MOTOR CASE)
AMBIENT HUMIDITY MAX. 85% (NO CONDENSATION)

TYPE OF CONNECTION (EXTERN)			MOTOR	
UNIPOLAR	BIPOLAR 1WINDING	BIPOLAR SERIAL	LEADS	WINDING
A	A	A	BRN	A
COM	COM		BLK	COM
A\		A\	ORG	A\
B	B	B	RED	B
COM	COM		WHT	COM
B\		B\	YEL	B\

for >speed
for <speed

FULL STEP 2 PHASE-Ex.,
WHEN FACING MOUNTING END (X)

STEP	A	B	A\	B\		CCW
1	+	+	−	−		
2	−	+	+	−		
3	−	−	+	+		
4	+	−	−	+	CW	

WIRING DIAGRAM

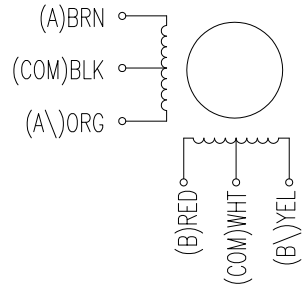

REV	DESCRIPTION	DATE	APVD

NANOTEC:

ST4018S0406

SCALE FREE		APVD	S.K.	26.04.06
X	±0.5	CHKD		
1PL	±0.2	DRN	J.W.	26.04.06
2PL	±0.1	SIGNATURE		DATE
ANGLE	±30'			

STEPPING MOTOR

DWG.NO

ST4018S0406