Front view and mounting

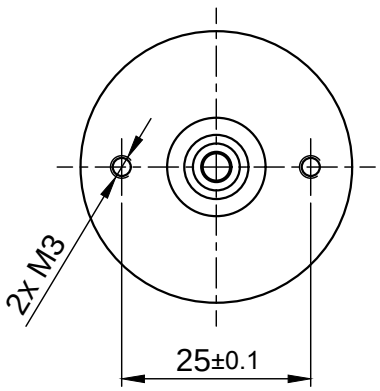

Side view

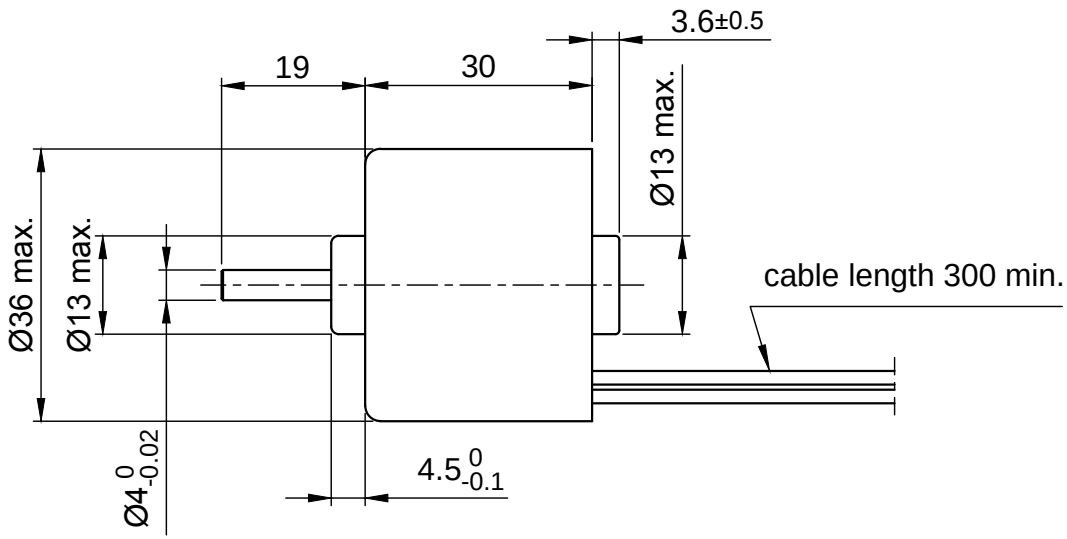

Rear view

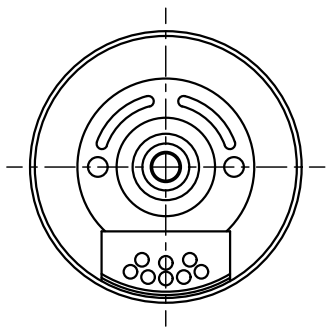

MOTOR SPECIFICATION			
No. of Poles		8	
Rated Voltage	V DC	24	
Current - Rated / Peak	A	0.5	1.5
Resistance Phase to Phase ±15%	Ω	5.25	
Inductance Phase to Phase (1kHz) ±20%	mH	3.3	
Torque - Rated / Peak	Nm	0.015	0.045
Torque Constant	Nm/A	0.030	
Power - Rated	W	7.5	
Speed - No Load / Rated ±10%	rpm	6000	4800
Rotor Inertia	kg m²	0.6	$x10^{-6}$

WIRING DIAGRAM			
	Colour	Function	Lead Gauge
Motor 8 pol.	YE	U	UL1430 AWG24
	BN	V	
	OG	W	
Hall 24 Impl. per Rev.	RD	+5V	UL1430 AWG26
	BU	H1	
	GN	H2	
	WH	H3	
	BK	GND	

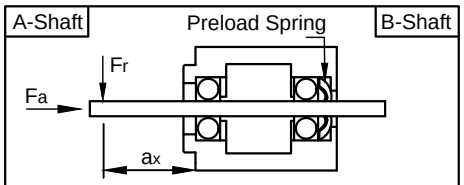

Max. Axial Force Fa	N		10
Max. Radial Force Fr (a1 = 10 mm)	N		15
Axial Play Fa = 4	N	mm	0.08
Radial Play Fr = 4	N	mm	0.02

CW FROM OUTPUT SHAFT

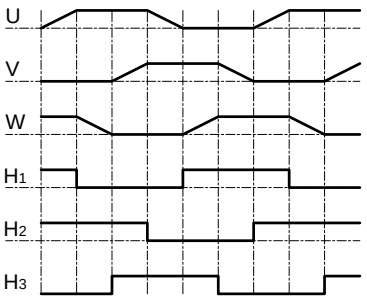

GENERAL MOTOR SPECIFICATION			
Ambient Temperature	°C	Min. -10	Max. 50
Max. Temperature Rise (at standstill - 2 phases energized)	°C	80	
Max. Ambient Humidity (non condensing)	%	85	
Insulation Class		B	
Insulation Resistance	MΩ	100	
Dielectric Strength (for 1 min - coil to case)	V AC	600	

ISO 8015	ISO 1302	ISO 2768-1 cK	ISO 13715

REV	Rev. Text	Name	Rel. Date
01	Updt. Rotor Inertia	Seimel_G	19.01.2018

	Date	Name
Drawn	04.12.2017	Import
Checked	18.01.2018	Seimel_G
Approved	19.01.2018	Seimel_G

Nanotec® PLUG & DRIVE

Weight: 0.12 kg

DBL36S024048-A

03000162

-

A4-Q

State: Released

Rev: 01

P