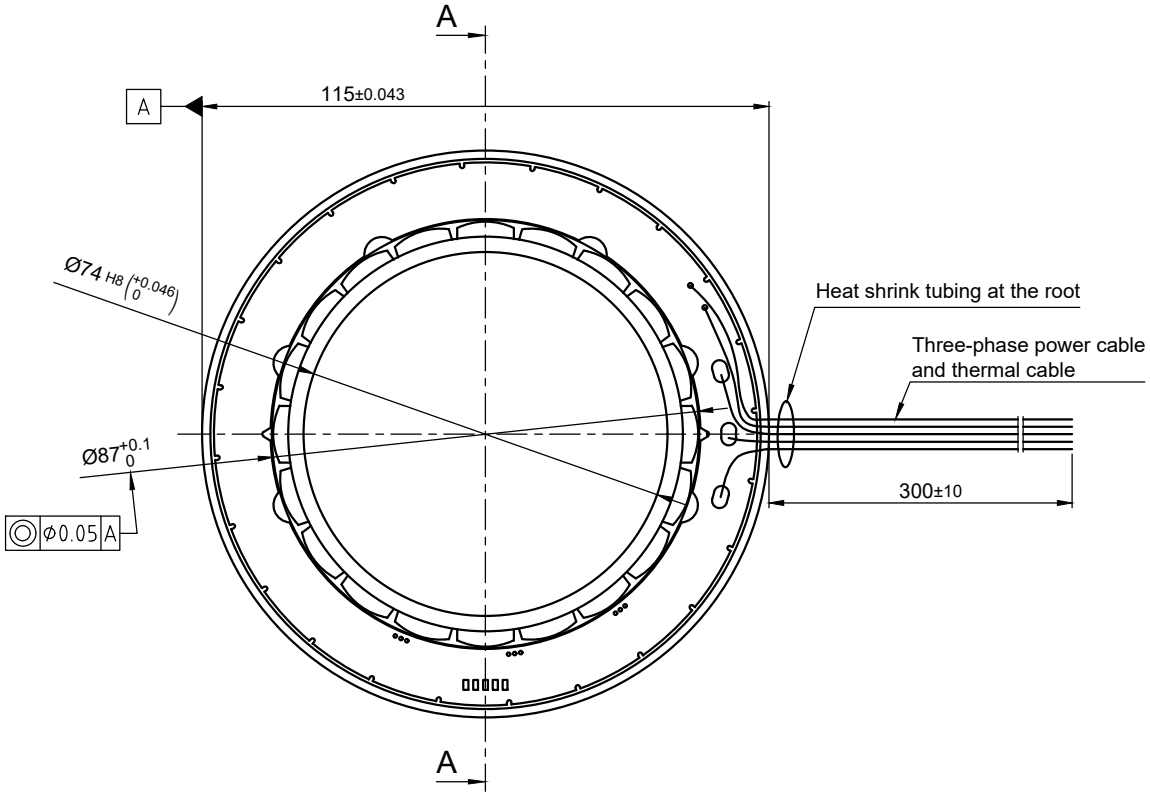

View A-A

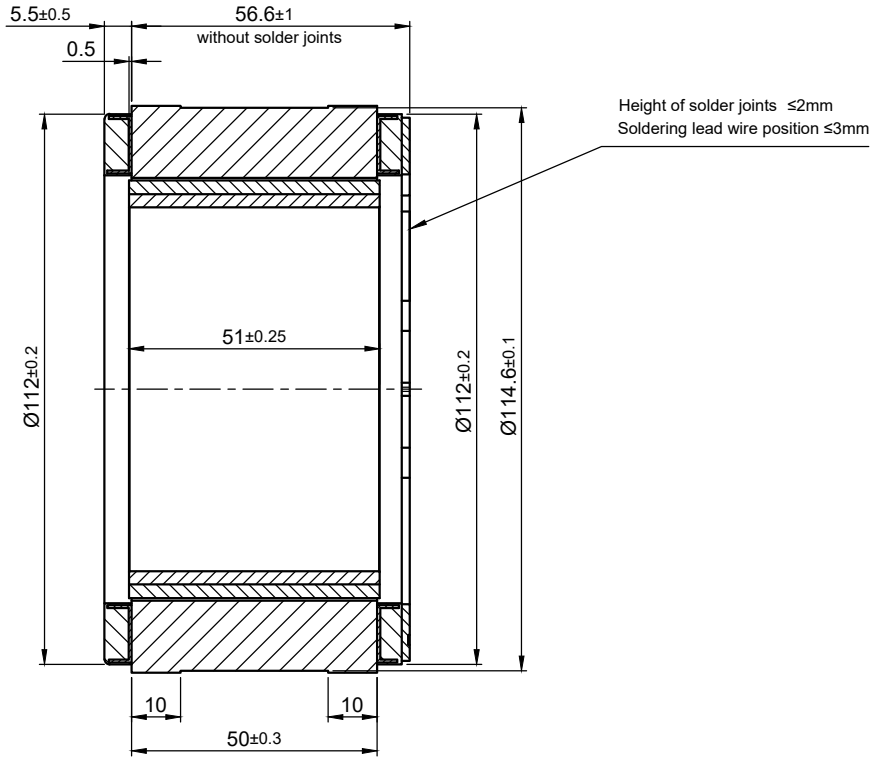

MOTOR SPECIFICATION			
No. of Poles		20	
Rated Voltage	V DC	48	
Current - Rated / Peak	A	1 15.9	/ 39
Resistance Line to Line	±10% Ω @20°	0.35	
Inductance Line to Line (1kHz)	±20% mH	1.6	
Torque - Rated / Peak	Nm	7.8	/ 23.4
Torque Constant	Nm/A	0.662	
Rated Power	W	506	
Speed - No Load / Rated	±10% rpm	900	/ 620
Rotor Inertia	kg m²	910	$x10^{-6}$

WIRING DIAGRAM			
	Colour	Function	Lead Gauge
Motor	YE	U	UL... AWG12
	RD	V	
	BK	W	
Thermistor	WH	NTC1	UL1332 AWG26
	WH	NTC2	

Thermistor (NTC): R25: 100kΩ±5%; B25/50: 3950±1%

GENERAL MOTOR SPECIFICATION		
Ambient Temperature	°C	-20 ... 50
Storage Temperature	°C	-20 ... 85
Max. Temperature Rise (at standstill)	°C	80
Max. Ambient Humidity (non condensing)	%	85
Insulation Class		B
Insulation Resistance	MΩ	100 @500VDC
Dielectric Strength (for 1 sec - coil to case)	V AC	1000

ISO 8015	ISO 1302	ISO 2768 cK	ISO 13715	Weight: ±10% 2.0 kg

	Date	Name
Drawn	07.11.2024	Schneid_A
Reviewed	10.02.2025	Reith_S
Released	10.02.2025	Reith_S

REV	Rev. Text	Name	Date
01	CR_Nr. 2025-0043	Schneid_A	23.07.2025

Nanotec® PLUG & DRIVE

DKA115L048006

20002693

A4 Page 1

State: Released | Rev: 01 | CONFIDENTIAL