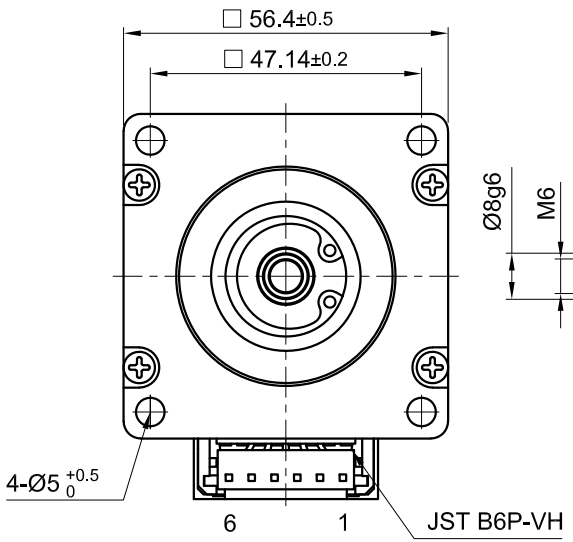

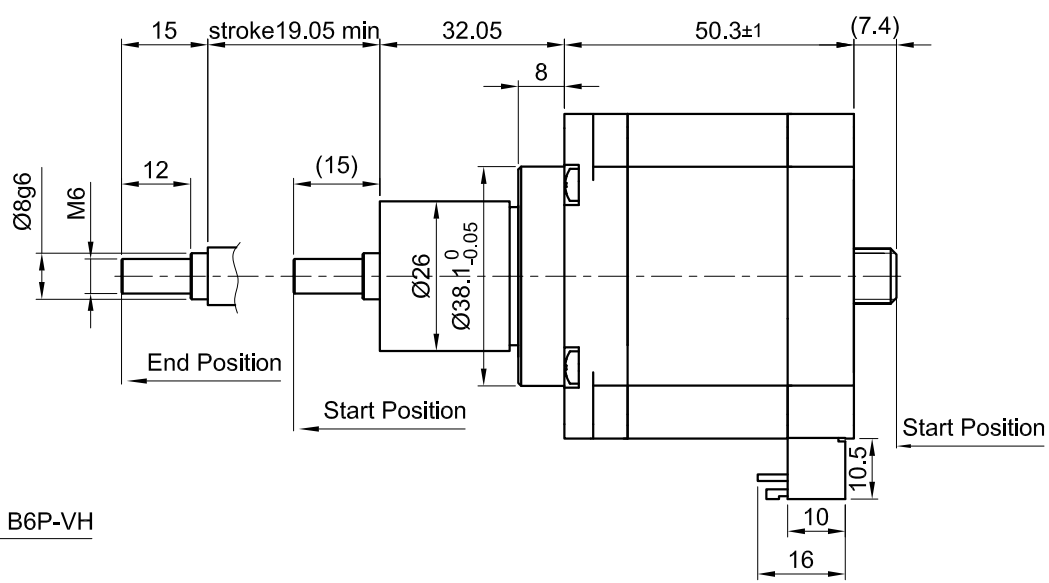

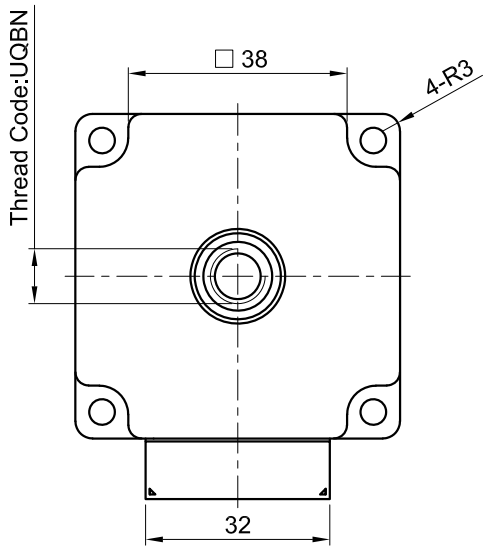

SPECIFICATION \ CONNECTION	BIPOLAR
AMPS/PHASE	2.0
RESISTANCE/PHASE (Ohms)@25°C	1.5±15%
INDUCTANCE/PHASE (mH) @1KHz	4.3±20%
THREAD DIAMETER (mm) [in]	9.525 [0.375]
THREAD LEAD(mm) [in]	1.5875 [0.0625]
THRUST (N)	966.3
RESOLUTION (mm/STEP)	0.008
MAX. SPEED (mm/sec.) AT 24V	22
WEIGHT (Kg) [lb]	0.73 [1.61]
TEMPERATURE RISE: MAX.80°C (MOTOR STANDSTILL; FOR 2 PHASE ENERGIZED)	
AMBIENT TEMPERATURE −10°~ 50°C [14°F ~ 122°F]	
INSULATION RESISTANCE 100 MOhm (UNDER NORMAL TEMPERATURE AND HUMIDITY)	
INSULATION CLASS B 130° [266°F]	
DIELECTRIC STRENGTH 500VAC FOR 1 MIN. (BETWEEN THE MOTOR COILS AND THE MOTOR CASE)	
AMBIENT HUMIDITY MAX. 85% (NO CONDENSATION)	

Please regard the application note at www.nanotec.com for further informations.

MOTOR	
CONNECTOR PIN NO.	WINDING
1	A
3	A\
4	B
6	B\

FULL STEP 2 PHASE–Ex.,
WHEN FACING MOUNTING END (X)

STEP	A	B	A\	B\		CCW
1	+	+	−	−	↓	↑
2	−	+	+	−		
3	−	−	+	+		
4	+	−	−	+	CW	

WIRING DIAGRAM

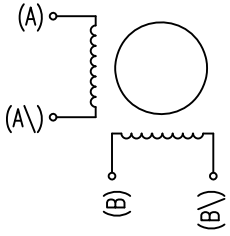

REV	DESCRIPTION	DATE	DRN
A	–	09.10.20	X T

Nanotec® PLUG & DRIVE

Surface specification DIN ISO 1302 | General tolerances DIN ISO 2768-cH | Work piece edge DIN ISO 13715

APVD	P.R.	23.04.20
CHKD	GYQ	23.04.20
DRN	X T	23.04.20
SIGNATURE		DATE

LINEAR ACTUATOR

DWG.NO LGA561S20–A–UQBN–019