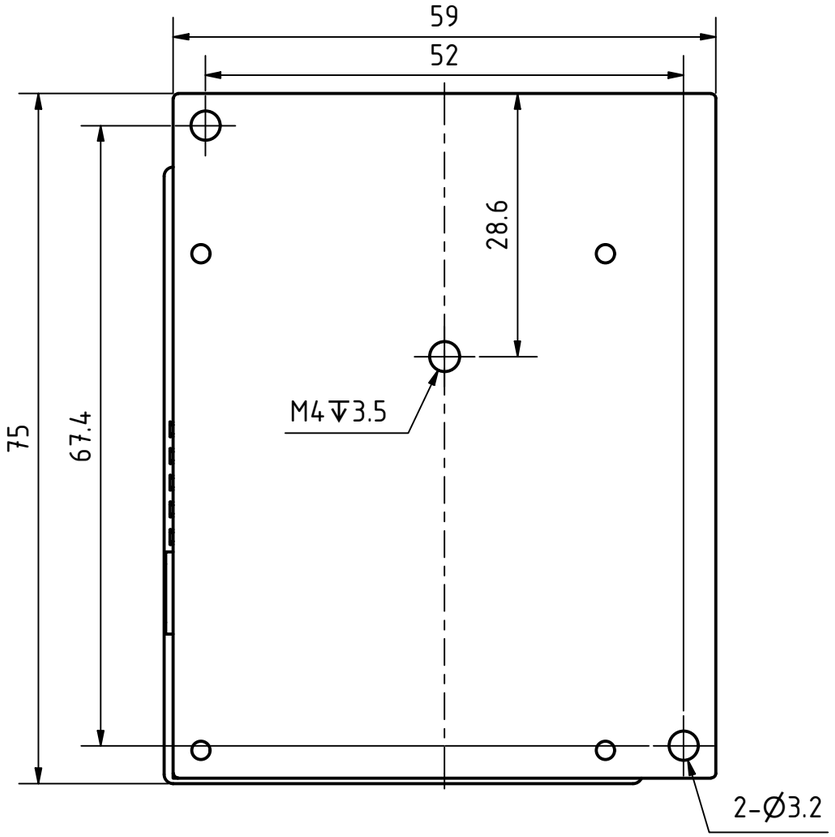

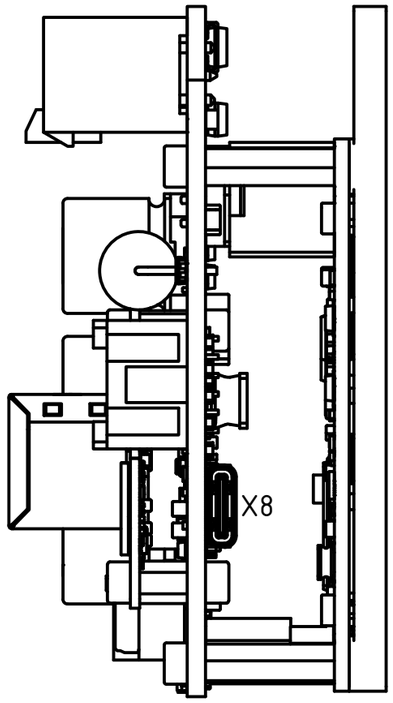

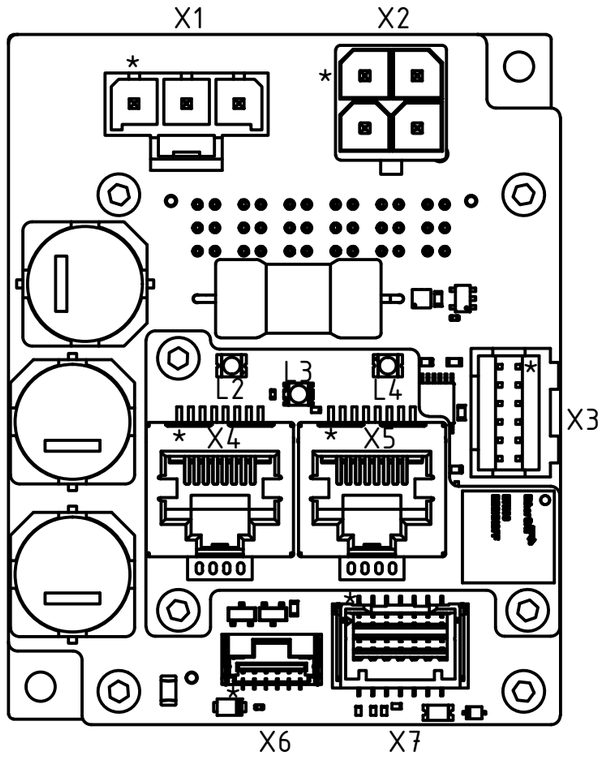

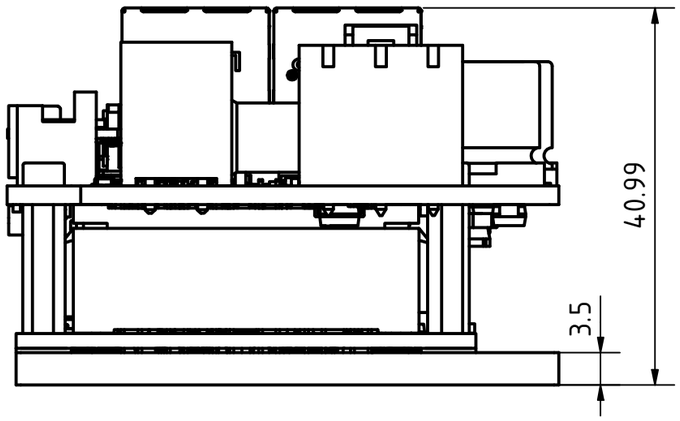

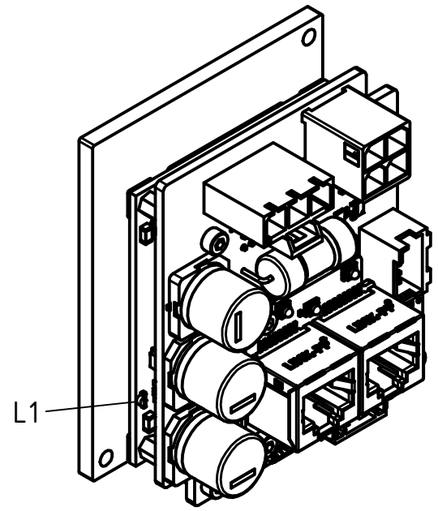

				General tolerances ISO 2768-m		Work piece edges DIN 6784
					Datum	Name
				DRN	2025/10/14	L X
				CHKD	2025/10/14	X T
				APVD	2025/10/14	GYQ
Rev	Description	Date	Name			

Scale:

Material:

Surface:

Nanotec® PLUG & DRIVE

CLC15-x-01

1

A3