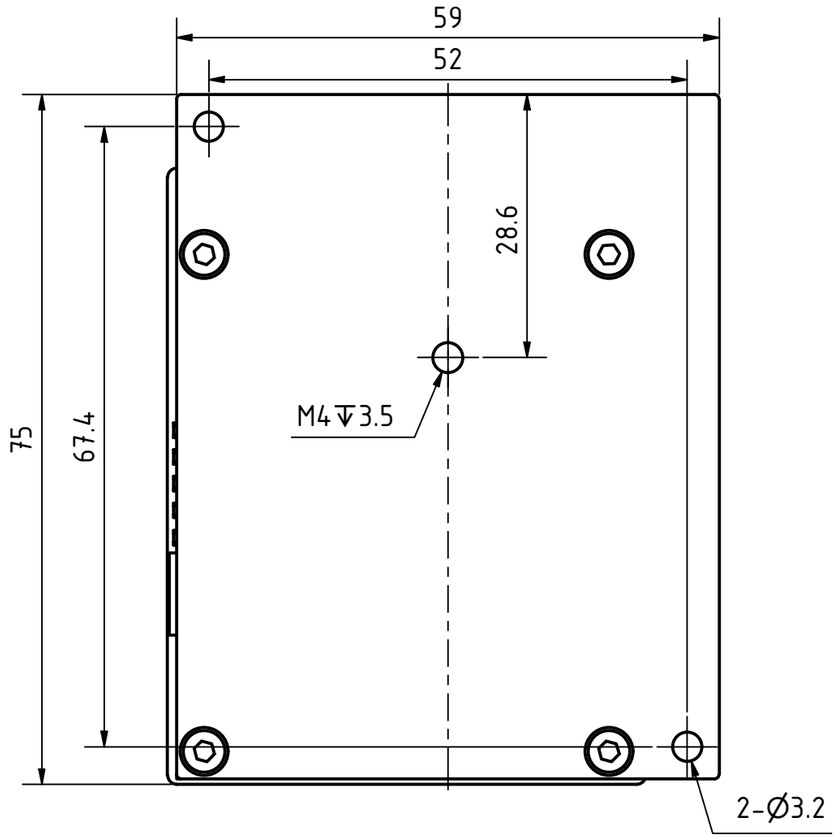

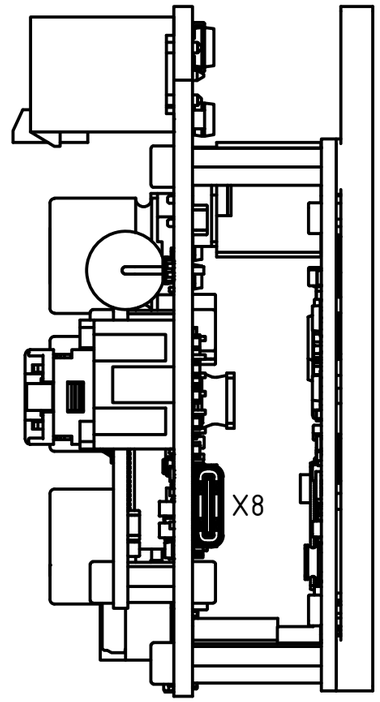

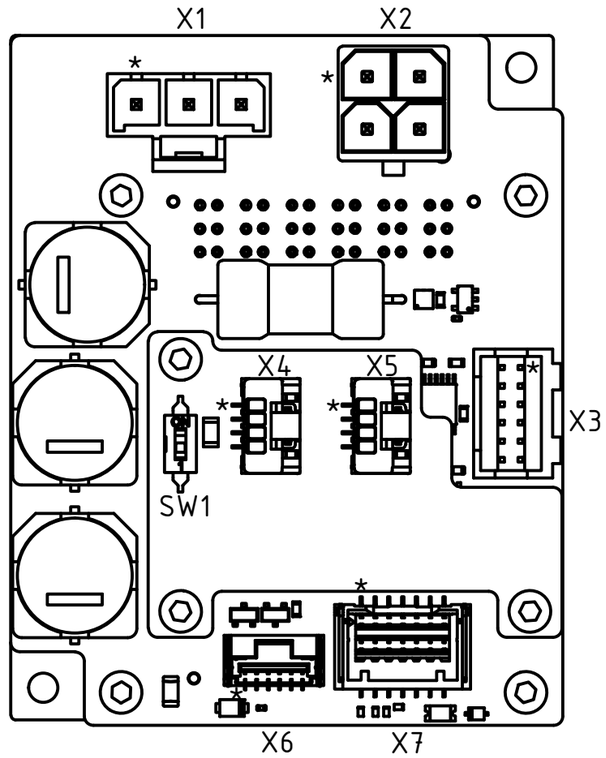

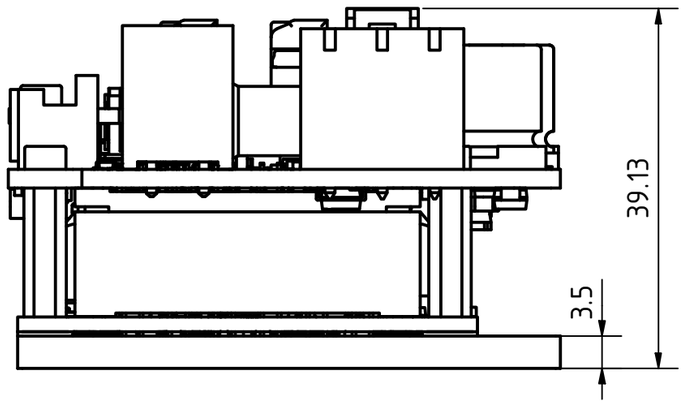

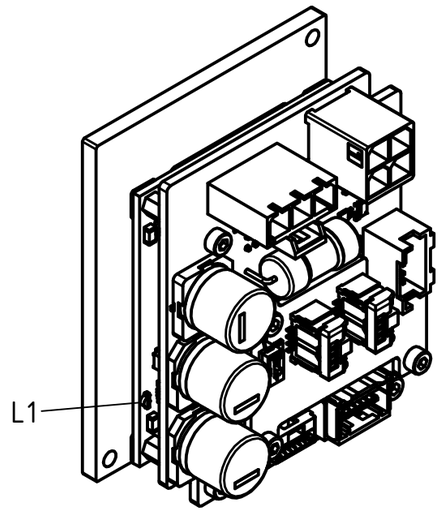

				General tolerances ISO 2768-m	Work piece edges DIN 6784	Scale:
						Material: Surface:
				Datum	Name	
				DRN 2025/7/7	L X	
				CHKD 2025/7/7	X T	
				APVD 2025/7/7	GYQ	
Rev	Description	Date	Name	Nanotec PLUG & DRIVE	CLC15-x-05	1 A3