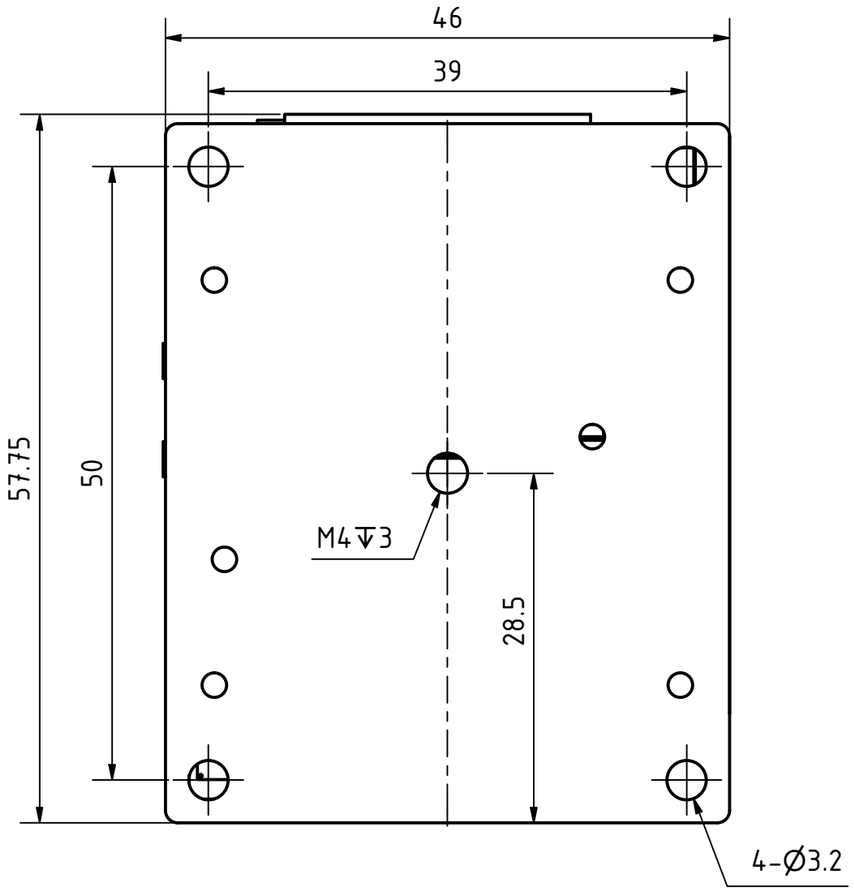

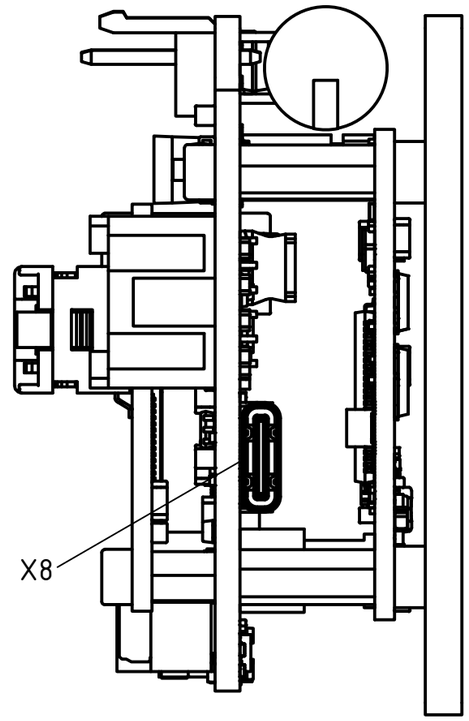

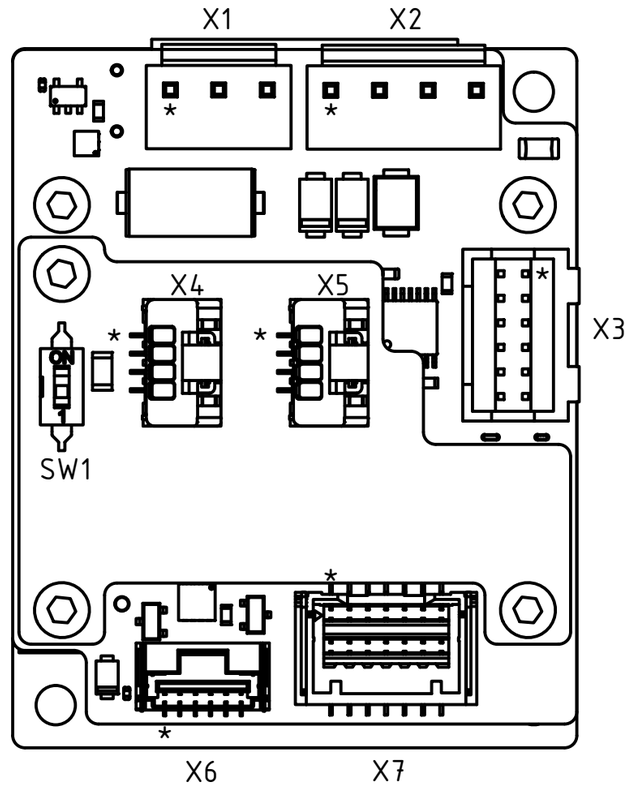

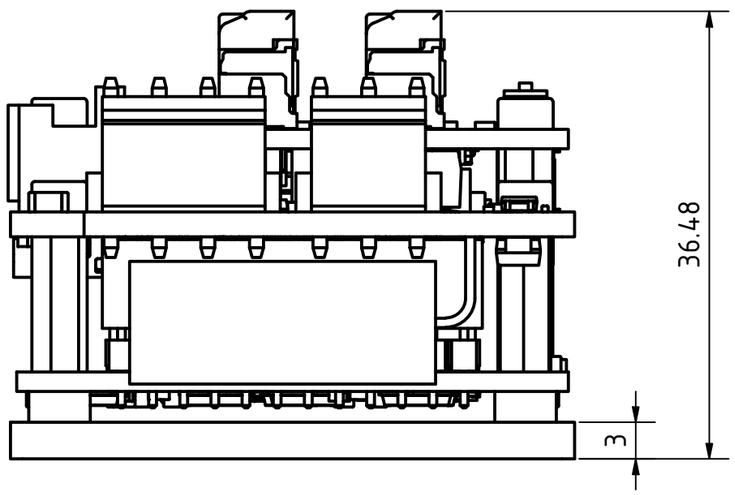

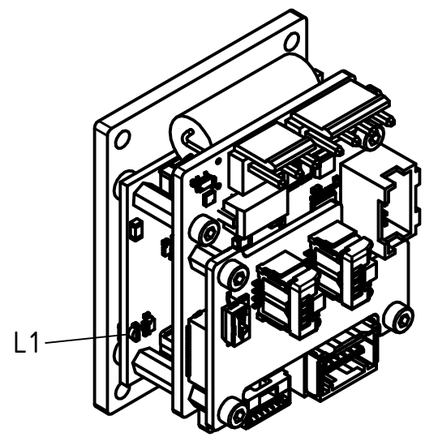

				General tolerances ISO 2768-m	Work piece edges DIN 6784	Scale:
						Material: Surface:
					Datum	Name
				DRN	2025/7/7	L X
				CHKD	2025/7/7	X T
				APVD	2025/7/7	GYQ
Rev	Description	Date	Name	Nanotec® PLUG & DRIVE	CLC6-x-05	1 A3