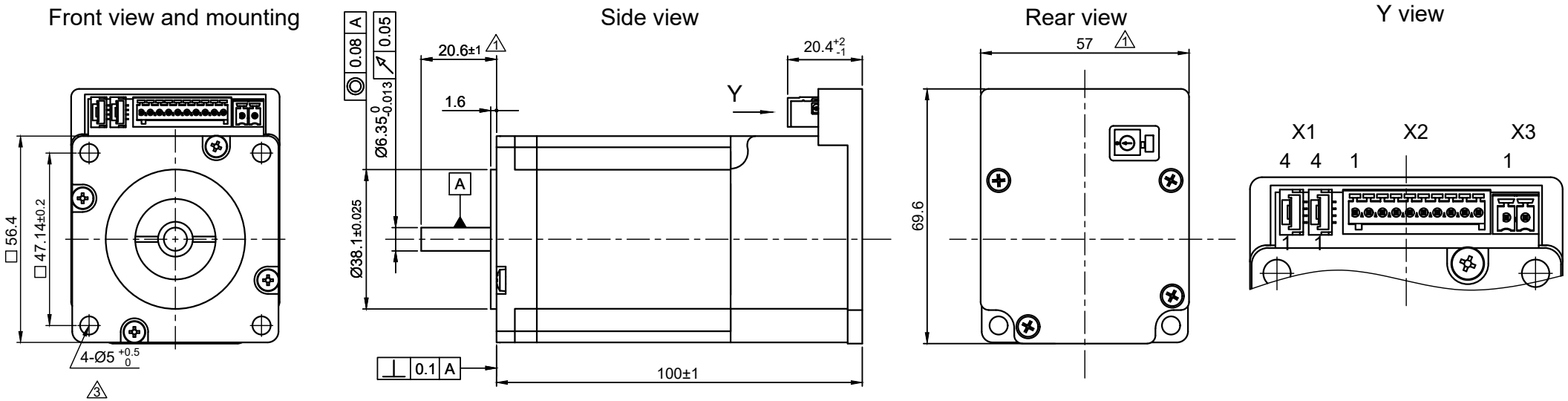

SPECIFICATION \ CONNECTION	BIPOLAR 1
VOLTAGE (VDC)	12 TO 48
AMPS/PHASE(A)	4.2
HOLDING TORQUE (Nm) [lb-in]	1.87 [16.55] 2
DETENT TORQUE (Nm) [lb-in]	0.068 [0.602]
STEP ANGLE (°)±ACCURACY	1.8±5% TO MICROSTEP
WEIGHT (Kg) [lb]	1.1[2.43]

PERMISSIBLE RADIAL+AXIAL FORCE

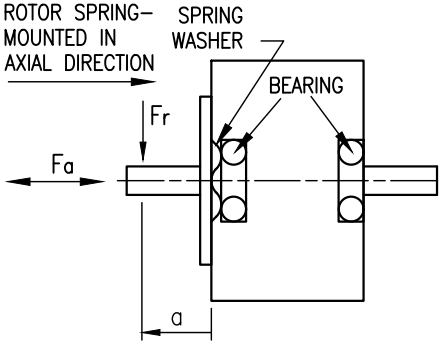

OVERTEMPERATURE PROTECTION (ELECTRONICS): 75°C 1	
AMBIENT TEMPERATURE -10°~ 50°C [14°F ~ 122°F] (HIGHER TEMPERATURE REDUCES DUTY CYCLE)	
INSULATION RESISTANCE 100 MOhm (UNDER NORMAL TEMPERATURE AND HUMIDITY)	
INSULATION CLASS B 130° [266°F]	
DIELECTRIC STRENGTH 500VAC FOR 1 MIN. (BETWEEN THE MOTOR COILS AND THE MOTOR CASE)	
AMBIENT HUMIDITY MAX. 85% (NO CONDENSATION)	

AXIAL-FORCE Fa (N)	Fa=15		
DISTANCE a (mm)	20		
RADIAL-FORCE Fr (N)	52		
	AXIAL	RADIAL	
SHAFT PLAY (mm)	0.2Max	0.02	
AT LOAD MAX: (N)	200	4.5	

X1, JST GH-4

PIN No.	Function
1	+UB_LOGIC(24V)
2	CAN+
3	CAN-
4	GND

X3, Degson 15EDGVC-3.5-02P-14 or equivalent Phoenix FMC-02 or equivalent alternative 4

PIN No.	Function
1	+VCC(12-48V)
2	GND

1

X2, Degson 15EDGVC-2.5-10P-14 or equivalent Phoenix MCV-10 or equivalent alternative 4

PIN No.	Function
1	GND
2	Analog input (0-10V)
3	+12V (Voltage Output, max.100mA)
4	Output1 (open drain)
5	Output2 (open drain)
6	Input1 (+5/+24V)
7	Input2 (+5/+24V)
8	Input3 (+5/+24V)
9	Input4 (+5/+24V)
10	GND

REV	DESCRIPTION	DATE	DRN
4	change connector description	08.08.25	YBY
3	HOLE Ø5 ADD TOLERANCE +0.5 0	11.07.22	YBY
2	NEW HOLDING TORQUE	11.10.16	GYQ

Nanotec® PLUG & DRIVE

Surface specification DIN ISO 1302 | General tolerances DIN ISO 2768-cH | Work piece edge DIN ISO 13715

APVD	G.M.	16.05.14
CHKD		
DRN	GYQ	16.05.14
SIGNATURE		DATE

PLUG&DRIVE MOTOR

DWG.NO PD4-C5918L4204-E-08