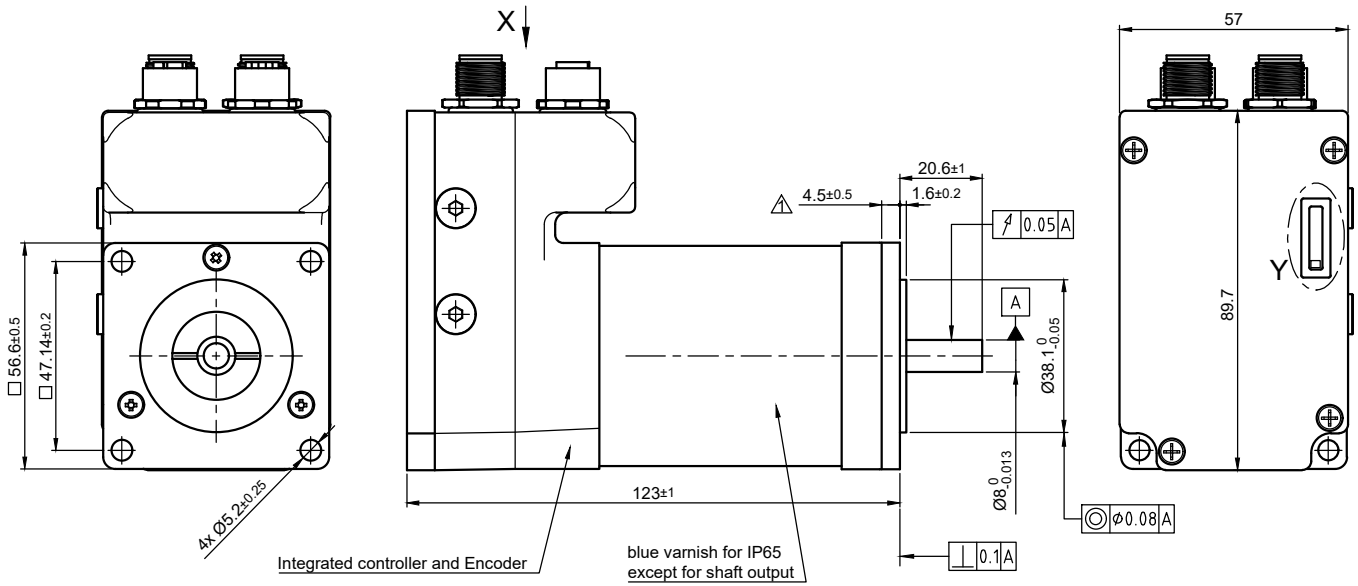

View X (Detail)

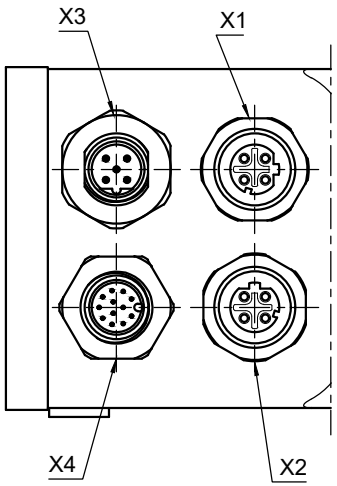

Detail Y

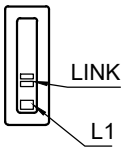

X1	Modbus TCP IN
M12 / 4-Pole / D-Coding / female	

X2	Modbus TCP OUT
M12 / 4-Pole / D-Coding / female	
Pin No.	Function
1	TD+
2	RD+
3	TD-
4	RD-
cable shield on housing	

X3	POWER
M12 / 5-Pole / B-Coding / male	
Pin No.	Function
1	+UB
2	+UB
3	GND
4	GND
5	n.c.
cable shield on housing	

X4	IO
M12 / 12-Pole / A-Coding / male	
Pin No.	Function
1	GND
2	Input 1 (+5V/+24V)
3	Input 2 (+5V/+24V)
4	Input 3 (+5V/+24V)
5	Input 4 (+5V/+24V)
6	Input 5 (+5V/+24V)
7	Input 6 (+5V/+24V)
8	Analog Input (0-10V/0-20mA)
9	Output 1 (open drain)
10	Output 2 (open drain)
11	+5V Voltage Supply (max. 100mA)
12	+UB Logic (24V)
cable shield on housing	

MOTOR SPECIFICATION			
No. of Poles		6	
Rated Voltage	V DC	48	
Operating Voltage - Min. / Max.	V DC	12	/ 48
Current - Rated / Peak	A	6	/ 18
Torque - Rated / Peak	Nm	0.6	/ 1.8
Torque Constant	Nm/A	0.1	
Power - Rated / Peak	W	220	/ 660
Speed - No Load / Rated ±10%	rpm	4500	/ 3500
Operating Voltage Encoder	V DC	5	
Encoder Resolution	cpr	1024	
Encoder Resolution (cpr with quadrature)	ppr	4096	
Encoder Signal Type		incremental	
Rotor Inertia	kg m²	17.3	$x10^{-6}$

GENERAL MOTOR SPECIFICATION		
Interface		MODBUS TCP
Ambient Temperature	°C	-10 ...40
Max. Ambient Humidity (non condensing)	%	85
Insulation Class		B
Insulation Resistance	MΩ	100
Dielectric Strength (for 1 min - coil to case)	V AC	500
Protection Class (except shaft outlet)		IP65

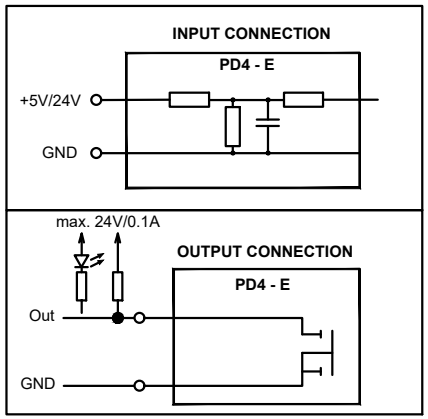

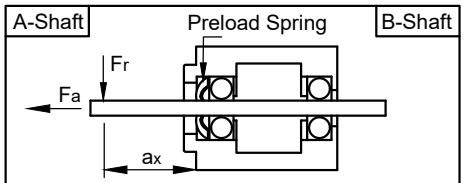

Max. Axial Force	Fa	N	15
Max. Radial Force	Fr (a1 = 5 mm)	N	130
Axial Play	Fa = 10 N	mm	0.03
Radial Play	Fr = 5 N	mm	0.02

ISO 8015	ISO 1302	ISO 2768 cK	ISO 13715	Weight: ±10% 1.4 kg

REV	Rev. Text	Name	Date
01	additional dimension	Reith_S	15.02.2024

	Date	Name
Drawn	02.03.2022	Schneid_A
Reviewed	18.03.2022	Reith_S
Released	18.03.2022	Reith_S

Nanotec® PLUG & DRIVE

PD4-EB59CD-E-65-4A

20001400

A4 Page 1

State: Released | Rev: 01 | CONFIDENTIAL