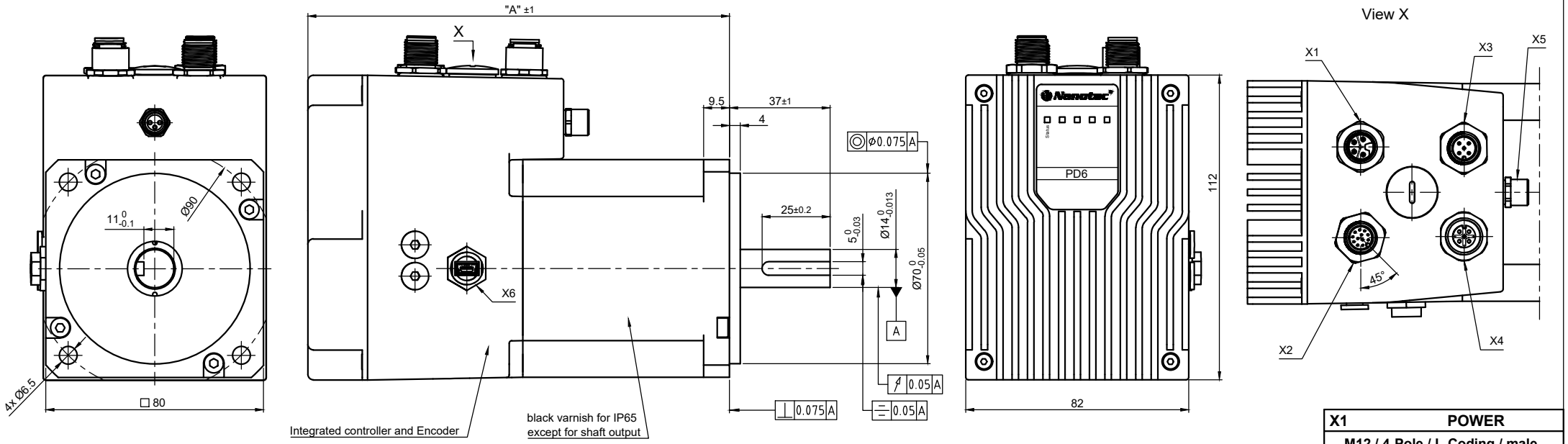

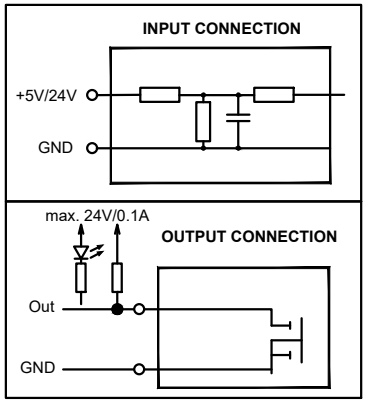

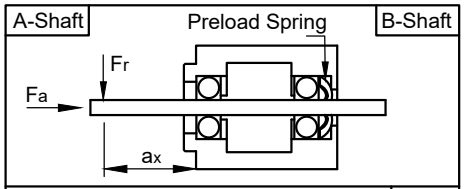

Max. Axial Force	Fa	N	45
Max. Radial Force	Fr (a1 = 20 mm)	N	115
Radial Play	Fr = 5 N	mm	0.02

X1	POWER
M12 / 4-Pole / L-Coding / male	
Pin No.	Function
1	+UB
2	+UB
3	GND
4	GND
cable shield on housing	

X3	CANopen IN
M12/ 5-Pole / A-Coding / male	
cable shield on housing	

X4	CANopen OUT
M12/ 5-Pole / A-Coding / female	
Pin No.	Function
1	CAN_SHLD
2	+UB Logic (24V)
3	GND
4	CAN+
5	CAN-
cable shield on housing	

X5	Brake OUT
M8/ 3-Pole / A-Coding / female	
PIN No.	Function
1	Vcc
3	GND
4	n.c.
cable shield on housing	

X6	Mini-USB

X2	IO
M12 / 12-Pole / A-Coding / male	
Pin No.	Function
1	GND
2	Input 1 (+5V/+24V)
3	Input 2 (+5V/+24V)
4	Input 3 (+5V/+24V)
5	Input 4 (+5V/+24V)
6	Input 5 (+5V/+24V)
7	Input 6 (+5V/+24V)
8	Analog Input (0-10V/0-20mA)
9	Output 1 (open drain)
10	Output 2 (open drain)
11	+5V Voltage Supply (max. 100mA)
12	+UB Logic (24V)
cable shield on housing	

MOTOR SPECIFICATION

PD6-EB80xx-x-65-2		SD-M	SD-E	MD-M	MD-E	LD-M	LD-E	CD-M	CD-E
Motor Length "**A**"	mm	134		155		170		190	
No. of Poles		8							
Rated Voltage	V DC	48							
Min. Operating Voltage	V DC	12							
Max. Operating Voltage	V DC	57.6							
Current - Rated / Peak	A	6.9 / 20		14 / 40		18.75 / 65		25 / 75	
Torque - Rated / Peak	Nm	0.9 / 2.5		1.7 / 5		2.25 / 6.5		3 / 9	
Torque Constant	Nm/A	0.13		0.12		0.12		0.12	
Power Rated	W	283		534		706		940	
Speed - No Load / Rated ±10%	rpm	4100 / 3000		4250 / 3000		4300 /3000		4250 /3000	
Rotor Inertia	kg m²	54.4 $x10^{-6}$		102 $x10^{-6}$		136 $x10^{-6}$		190 $x10^{-6}$	
Multiturn Encoder Resolution	bit	16	-	16	-	16	-	16	-
Singleturn Encoder Resolution	bit	17	12	17	12	17	12	17	12
Weight	kg	±10% 2.1		±10% 2.8		±10% 3.2		±10% 3.8	

6

GENERAL MOTOR SPECIFICATION

Interface		CANOPEN
Ambient Temperature	°C	-10 ...40
Storage Temperature	°C	-10 ...85
Max. Ambient Humidity (non condensing)	%	85
Protection Class (except shaft outlet)		IP65
Protection Class (shaft outlet)		IP54

ISO 8015	ISO 1302	ISO 2768 cK	ISO 13715

REV	Rev. Text	Name	Date
06	Ä-NR. 2025-0071	Schneid_A	20.11.2025
05	correct tolerance	Schneid_A	13.12.2022
04	correct Label	Schneid_A	09.11.2022
03	INFO Label	Schneid_A	12.10.2022
02	correct pos. USB Con.	Schneid_A	07.09.2022

	Date	Name
Drawn	28.07.2022	Schneid_A
Reviewed	02.08.2022	Rehse_P
Released	02.08.2022	Rehse_P

Nanotec® PLUG & DRIVE

PD6-EB80xD-x-65-2

20001580

A4 Page 1

State: Released | Rev: 06 | CONFIDENTIAL