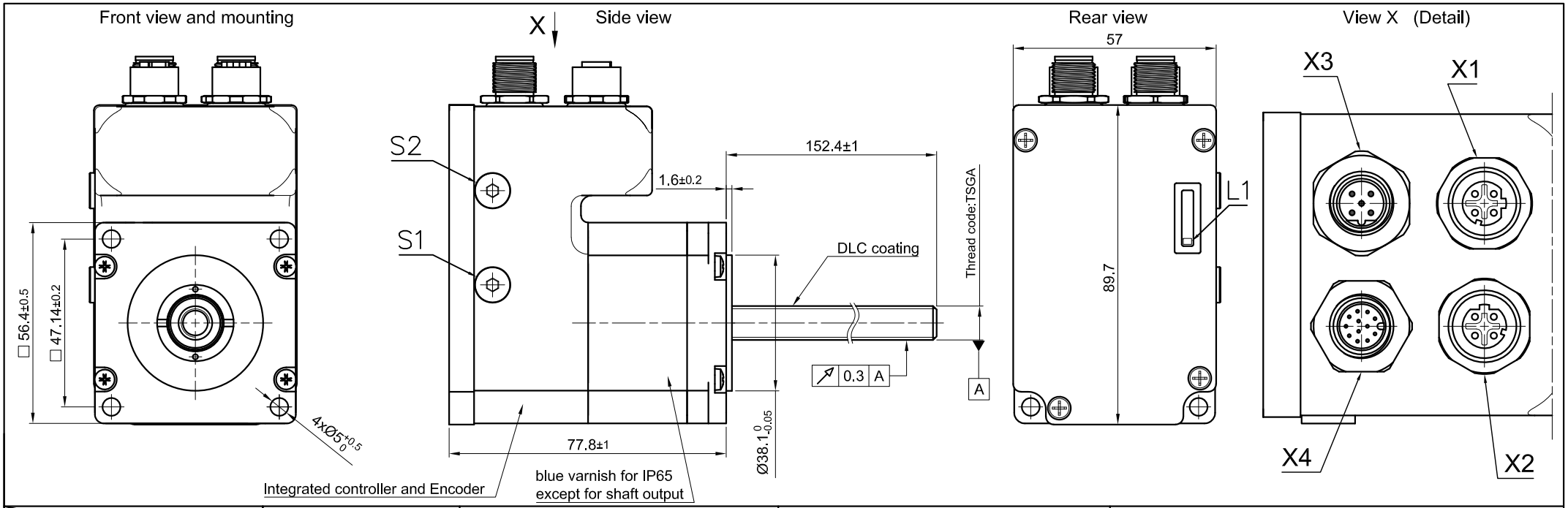

SPECIFICATION \ CONNECTION	BIPOLAR
VOLTAGE (VDC)	12 TO 48
AMPS/PHASE	4.2 A
THREAD DIAMETER (mm) [in]	10 [0.394]
THREAD LEAD(mm) [in]	6 [0.236]
THRUST (N)	500.7
RESOLUTION (mm/STEP)	0.03
MAX. SPEED (mm/sec.) AT 48V	150
WEIGHT (Kg) [lb]	0.95 [2.09]

INPUT CONNECTION

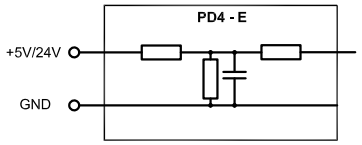

OUTPUT CONNECTION

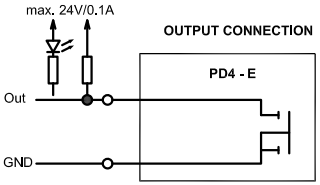

OVERTEMPERATURE PROTECTION (ELECTRONICS): 75°C

AMBIENT TEMPERATURE −10°~ 50°C [14°F ~ 122°F]

INSULATION RESISTANCE 100 MOhm (UNDER NORMAL TEMPERATURE AND HUMIDITY)

INSULATION CLASS B 130° [266°F]

DIELECTRIC STRENGTH 500VAC FOR 1 MIN. (BETWEEN THE MOTOR COILS AND THE MOTOR CASE)

AMBIENT HUMIDITY MAX. 85% (NO CONDENSATION)

PERMISSIBLE RADIAL+AXIAL FORCE

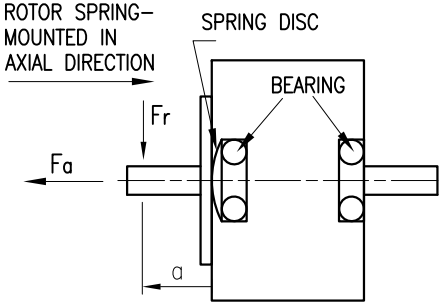

Please regard the application note at www.nanotec.com for further informations.

X1 Modbus TCP IN (M12, 4-Pole, D-coding, female)	
X2 Modbus TCP OUT (M12, 4-Pole, D-coding, female)	
Pin No.	Function
1	TD+
2	RD+
3	TD−
4	RD−

X3 Power (M12, 5-Pole, B-coding, male)	
Pin No.	Function
1	+UB (12−48V)
2	+UB (12−48V)
3	GND
4	GND
5	N.C.

X4 IO (M12, 12-Pole, A-coding, male)	
Pin No.	Function
1	GND
2	Input 1 (+5V/+24V)
3	Input 2 (+5V/+24V)
4	Input 3 (+5V/+24V)
5	Input 4 (+5V/+24V)
6	Input 5 (+5V/+24V)
7	Input 6 (+5V/+24V)
8	Analog Input (0−10V/0−20mA)
9	Output 1 (open drain)
10	Output 2 (open drain)
11	+5V Voltage Supply (max. 100mA)
12	+UB Logic (24V)

REV	DESCRIPTION	DATE	DRN

Nanotec® PLUG & DRIVE

Surface specification DIN ISO 1302	General tolerances DIN ISO 2768- cH	Work piece edge DIN ISO 13715

APVD	P.R.	01.02.23
CHKD	GYQ	01.02.23
DRN	X T	01.02.23
SIGNATURE		DATE

PLUG&DRIVE MOTOR

DWG.NO PSA56S-E-4-VSGA-152