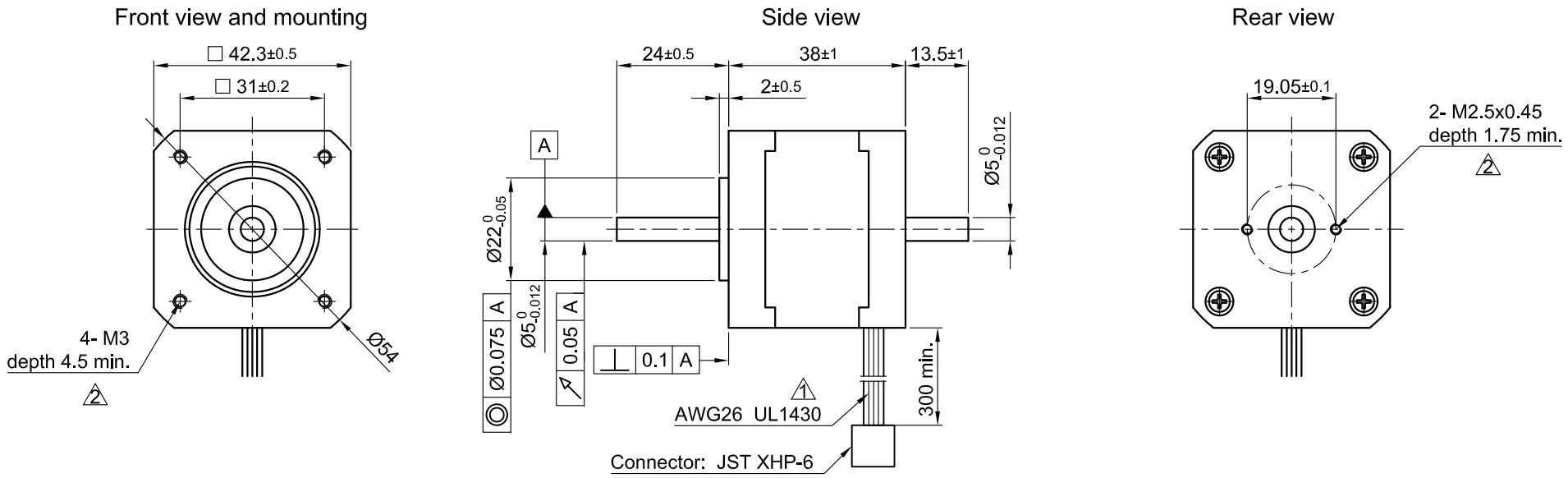

SPECIFICATION \ CONNECTION	UNIPOLAR OR BIPOLAR-1 WINDING	BIPOLAR SERIAL
VOLTAGE (VDC)	3.7	5.27
AMPS/PHASE	1.2	0.85
RESISTANCE/PHASE (Ohms)@25°C	3.1±15%	6.2±15%
INDUCTANCE/PHASE (mH) @1KHz	2.9±20%	11.6±20%
HOLDING TORQUE (Nm) [lb-in]	0.28 [2.478]	0.396 [3.505]
DETENT TORQUE (Nm) [lb-in]	9.8×10^{-3} [8.673×10^{-2}]	
STEP ANGLE (°)	1.8	
STEP ACCURACY (NON-ACCUM)	±5% 2 1	
ROTOR INERTIA (Kg-m²) [lb-in²]	5.7×10^{-6} [1.95×10^{-2}]	
WEIGHT (Kg) [lb]	0.24 [0.53]	

TEMPERATURE RISE: MAX.80°C (MOTOR STANDSTILL; FOR 2 PHASE ENERGIZED)
AMBIENT TEMPERATURE -10°~ 50°C [14°F ~ 122°F]
INSULATION RESISTANCE 100 MOhm (UNDER NORMAL TEMPERATURE AND HUMIDITY)
INSULATION CLASS B 130° [266°F]
DIELECTRIC STRENGTH 500VAC FOR 1 MIN. (BETWEEN THE MOTOR COILS AND THE MOTOR CASE)
AMBIENT HUMIDITY MAX. 85% (NO CONDENSATION)

PERMISSIBLE RADIAL+AXIAL FORCE

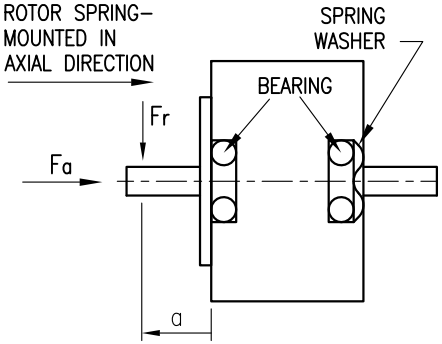

AXIAL-FORCE Fa (N)	Fa=7			
DISTANCE a (mm)	5	10	15	20
RADIAL-FORCE Fr (N)	58	36	26	20

	AXIAL	RADIAL
SHAFT PLAY (mm)	0.08	0.02
AT LOAD MAX: (N)	4.5	4.5

TYPE OF CONNECTION (EXTERN)			MOTOR		
UNIPOLAR	BIPOLAR 1WINDING	BIPOLAR SERIAL	CONNECTOR PIN NO.	LEADS	WINDING
A	A	A	1	BRN	A
COM	COM		5	BLK	COM
A\		A\	3	ORG	A\
B	B	B	2	RED	B
COM	COM		6	WHT	COM
B\		B\	4	YEL	B\

for >speed
for <speed

FULL STEP 2 PHASE-Ex.,
WHEN FACING MOUNTING END (X)

STEP	A	B	A\	B\		CCW
1	+	+	−	−		
2	−	+	+	−		
3	−	−	+	+		
4	+	−	−	+	CW	

WIRING DIAGRAM

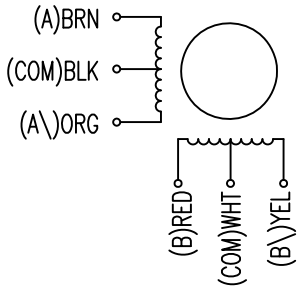

REV	DESCRIPTION	DATE	DRN
2	rework draw/change depth M2.5/M3	09.02.16	A.S.
1	VALUE OF BACK-EMF+UL NO.	20.06.11	LB

Nanotec® PLUG & DRIVE

Surface specification DIN ISO 1302 | General tolerances DIN ISO 2768- cH | Work piece edge DIN ISO 13715

	SIGNATURE	DATE
APVD	S.Ha.	26.02.07
CHKD		
DRN	J.W.	29.11.06

STEPPING MOTOR

DWG.NO ST4118M1206-B