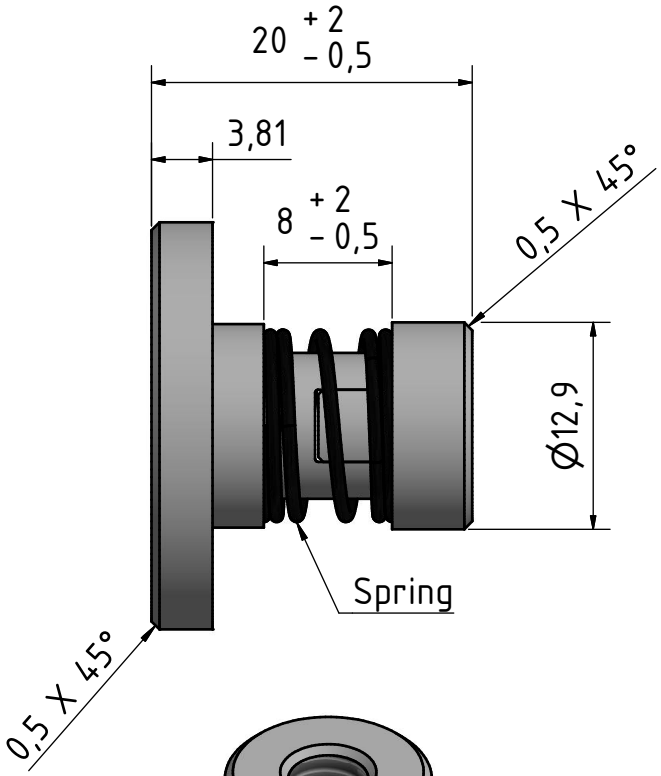

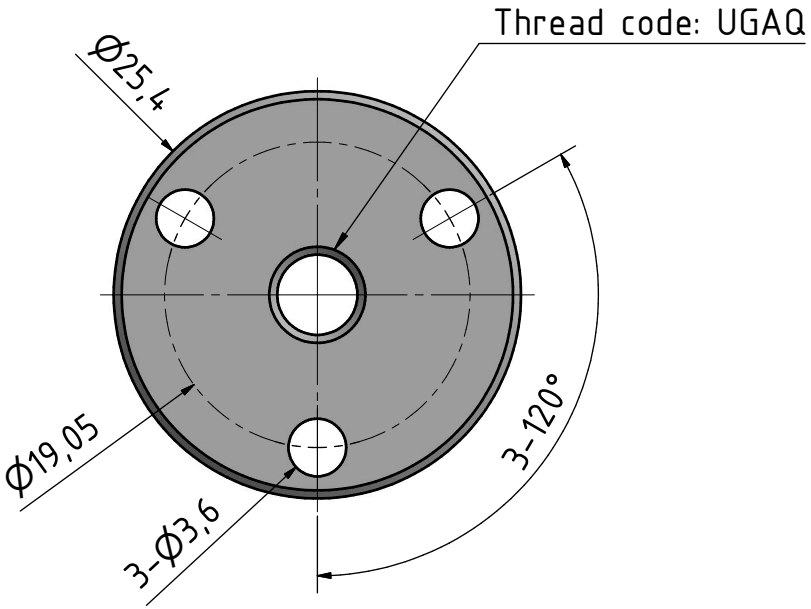

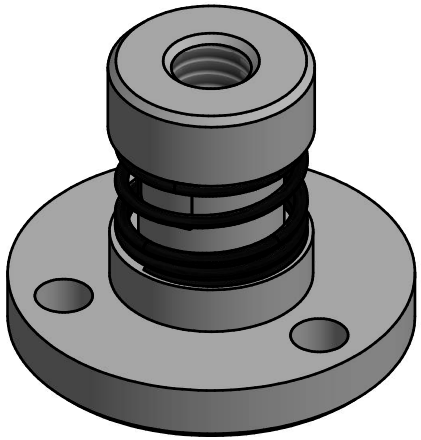

Thread code:UGAQ	
Thread type	ACME
Major diameter(mm)	5.017...5.271
Minor diameter(mm)	4.128...4.255
Lead	0.635
Pitch	0.635
Starts	1

Spring data	
Test length L1(mm)[in]	8.92 [0.35]
Force at L1(N)[lb]	20.91 [4.7]
Spring rate(N/mm)[lb/in]	3.061 [17.479]

General tolerances ISO 2768-m

Work piece edges DIN 6784

Scale: 3:1

Material: POM

Surface:

	Datum	Name
DRN	2020/6/15	X T
CHKD	2020/6/15	GYQ
APVD		

axial-compensated nut for UGAQ

Nanotec® PLUG & DRIVE

LSNUT-AEAE-UGAQ

1

A3

Rev	Description	Date	Name