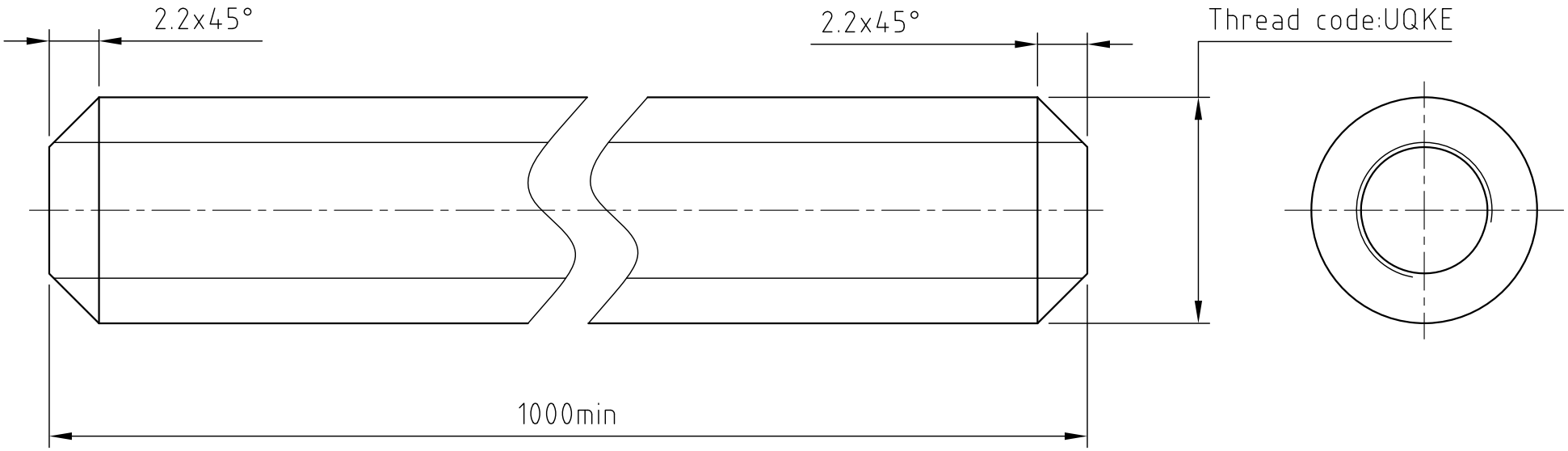

Thread code UQKE	
Thread type	ACME
Major diameter [mm]	9.398...9.525
Minor diameter [mm]	5.977...6.477
Lead	10.16
Pitch	2.54
Starts	4
Thread per inch	10

				Surface specification DIN ISO 1302	General tolerances DIN ISO 2768- mK	Work piece edge DIN ISO 13715	Scale:	
							Material: SUS303Cu (≙1.4570)	
C	-	25.07.22	X T	Nanotec® PLUG & DRIVE		Name	Date	THREADED SPINDLE
B	-	09.12.20	X T		DRN	L W	10.04.2018	
A	-	18.04.18	L W		CHKD	GYQ	10.04.2018	SCREW-AAA-UQKE-1000
REV	DESCRIPTION	DATE	DRN		APVD	P.R.	10.04.2018	