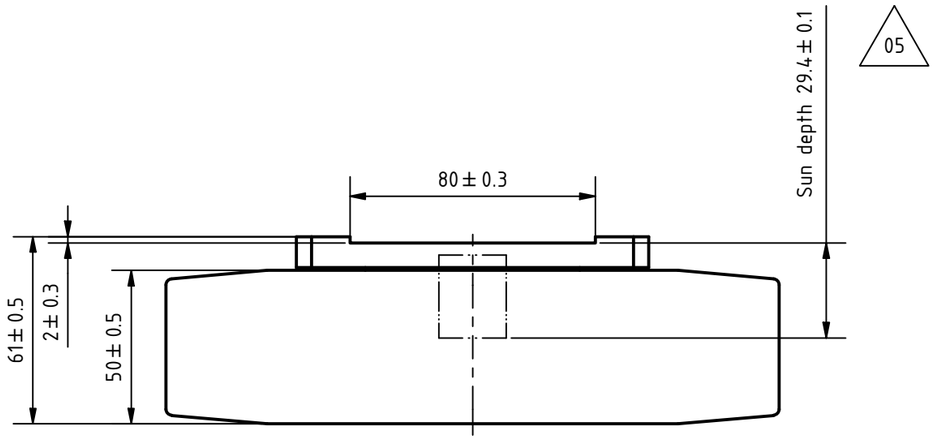

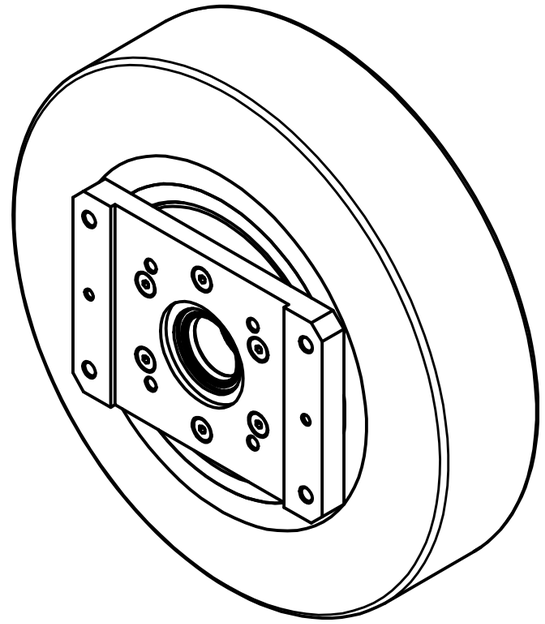

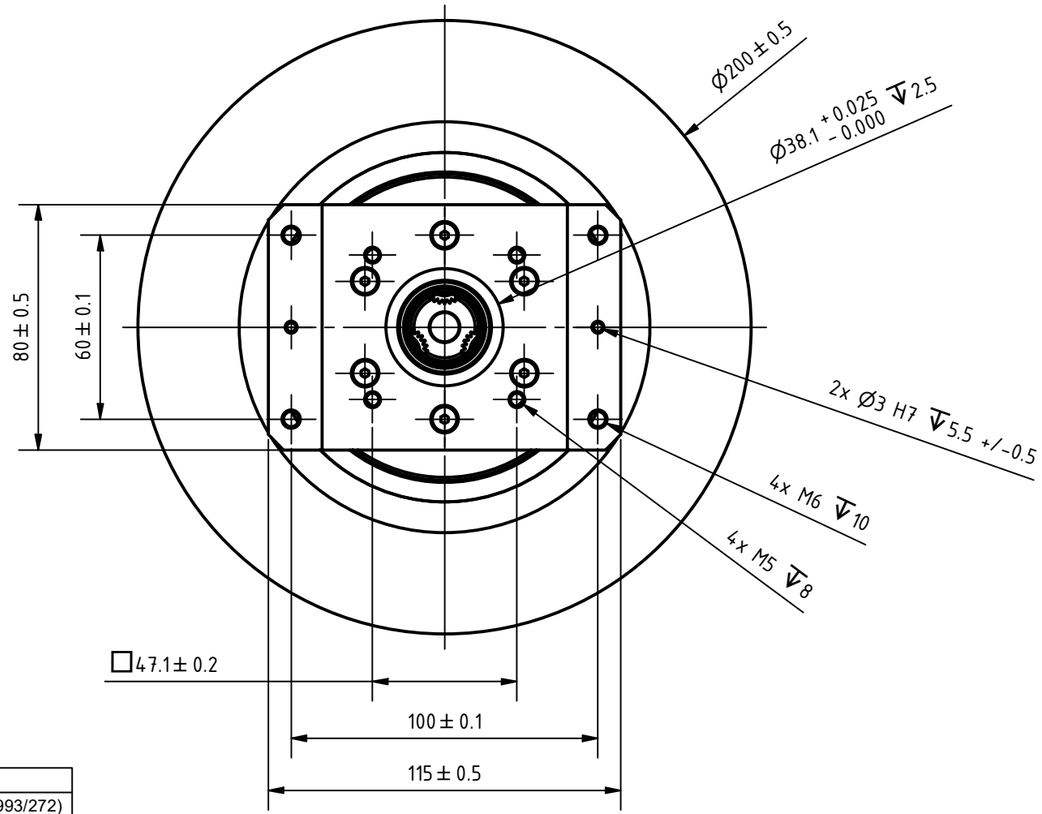

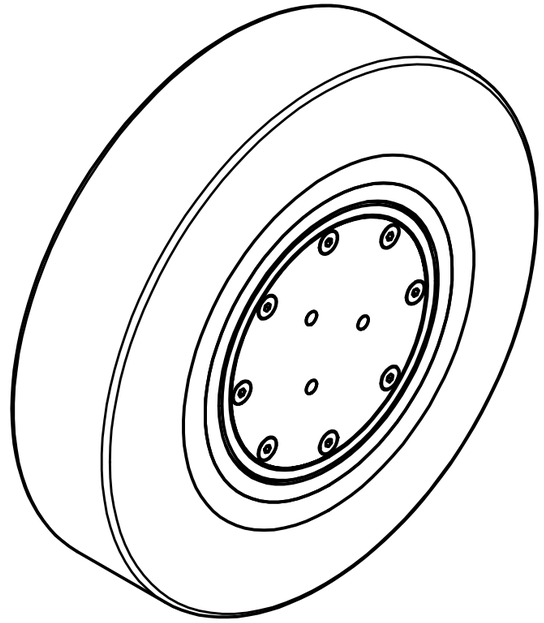

WHEEL DRIVE SPECIFICATION					
Reduction Ratio xx		11 (18225/1681)	16 (3969/256)	20 (7371/368)	26 (6993/272)
No. of Stages		2			
Rated Output Torque	Nm	20.27	22.01	23.03	23.13
Max. Output Torque	Nm	40.54	44.02	46.06	46.26
Rated Input Speed	rpm	3500	3500	3500	3500
Max. Input Speed	rpm	4685	5968	8304	8988
Backlash	°	<30 arcmin	<30 arcmin	<30 arcmin	<30 arcmin
Efficiency	%	94	94	94	94
Inertia	10^{-6} kg m²	106	56	33	21
Load Capacity	kg	400			
Wheel Material		Vulkollan			
Ambient Temperature	°C	-15...+90			
Protection Class		IP54			

06

04

-0.2 0.2

ISO 8015	ISO 1302	ISO 2768 cK	ISO 13715

REV	Rev. Text	Name	Date
06	updated specifications	Kolev._I	02.05.2024
05	sun depth changed	Kolev._I	31.01.2024
04	Load capacity updated	Micheli._M	30.06.2020
03	specifications updated	Micheli._M	31.03.2020
02	-		

	Date	Name
Drawn	11.09.2019	Rehse_P
Reviewed	13.09.2019	Naubert_A
Released	13.09.2019	Naubert_A

Nanotec® PLUG & DRIVE

Weight: ± 10% 4.5kg

WD20050-56xx-23X

06200361

Scale: 1 : 2

A3 Page 1

State: Released | Rev: 06 | CONFIDENTIAL